ePublishing

Psychology: the Journal of the Hellenic Psychological Society

Vol 4, No 2 (1997)

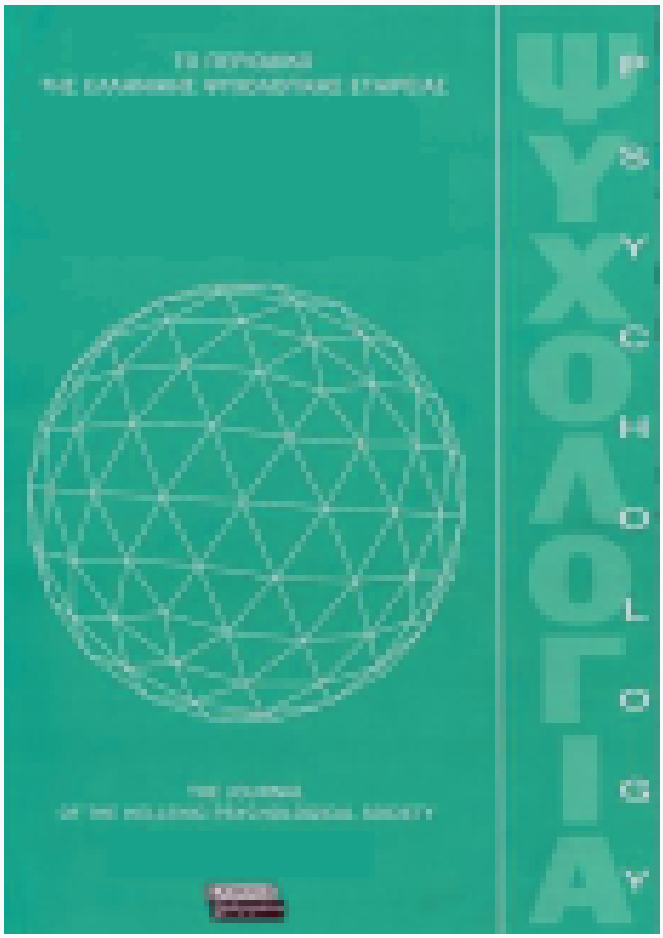

Brain and mind: The case of subjective experience

Anastasia Efklides

doi: 10.12681/psy_hps.24215

Copyright © 2020, Anastasia Efklides

This work is licensed under a Creative Commons Attribution-ShareAlike 4.0.

To cite this article:

Efklides, A. (2020). Brain and mind: The case of subjective experience. *Psychology: The Journal of the Hellenic Psychological Society*, *4*(2), 106–117. https://doi.org/10.12681/psy_hps.24215

https://epublishing.ekt.gr | **e-Publisher:** EKT | **Downloaded at:** 06/04/2026 07:50:50

Brain and mind: The case of subjective experience

ANASTASIA EFKLIDES
Aristotle University of Thessaloniki, Greece

ABSTRACT The term 'mind' for most of the people is synonymous to cognition. Neuropsychological work has adopted this definition, and the studies of brain and mind have focused on the interrelations between neural activity and performance on cognitive tasks. However, 'psyche' consists of cognition, affect, and volition. Work on emotions has demonstrated their innate character, thus extending the scope of brain/mind interrelations. Little is yet known, even in Psychology, about the functioning of volitional processes, let alone the neural mechanisms underlying their functioning. Another critical issue in both psychology and brain research is consciousness and the nature of subjective experience. Subjective experience is the end product and the locus of interplay among cognition, affect and volition. From this point of view, subjective experience represents the most complex form of psychological phenomena and the challenge for future research on brain and mind.

Key words: Brain, mind, subjective experience

The topic of this presentation involves the relations of brain and mind. The perspective taken is that of Cognitive Psychology, as it approaches phenomena such as consciousness and subjective experience. The contribution of neurosciences is also acknowledged, but the argument is not if psychology is reduced to neuroscience or the other way around. My aim is not to offer a theoretical account of the phenomena related to mind and brain either. My intention is simply to point out the complexity of the phenomena of conscious experience and to raise questions both psychology and neurosciences will have to answer in the future. I shall start with the definition of the word mind and the issues it creates, namely the mind-body distinction, the identification of mind with conscious mental activity (vs. unconscious) and the differentiation of mind as intellect from other aspects of conscious experience such as emotion, feelings, and volition. The effort will be to show that the dichotomies implicit in the above issues overlook the complexity of conscious experience and that understanding subjective experience requires a comprehensive approach that takes into account the multitude of factors that contribute and shape it.

The meaning of the word «mind»

If you look at the dictionary, you will discover a lot of different meanings of the word mind. A sample of these (as given in the Random House Dictionary of the English Language) is the following:

1. (In a human or other conscious being). The element, part, substance, or process that reasons, thinks, feels, wills, perceives, judges, etc.: the processes of mind.

Address: Anastasia Efklides, School of Psychology, Aristotle University of Thessaloniki, 540 06 Thessaloniki, Greece. Tel. *30-31 -997374. Fax: *30-31- 997384. E-mail: efklides@psy.auth.gr

2. *Psychology.* The totality of conscious and unconscious mental processes and activities of the organism.

3. Intellect or understanding, as distinguished from the faculties of feeling and willing; intelligence.

4. A particular instance of the intellect or intelligence, as in a person.

5. Psychic or spiritual being, as opposed to matter.

There are three issues which are raised when we analyse the definitions of mind given above:

First, mind is considered as something spiritual as opposed to body, that is, the physiological substrate of the organism. How are the two related, if they are different in nature? This dualism has underlied philosophical and metaphysical thinking for centuries, and is now restated in the mind-brain problem.

Second, the common use of the term *mind* equates the processes of mind with conscious processes. However, in psychology mind involves both conscious and unconscious processes.

Third, mind is conceived either as the total of cognitive, affective and volitional processes or as only intellectual (or cognitive in nature) processes.

Therefore there are three basic *dichotomies* in the conceptualization of mind, which any theory on mind and mind-brain relations has to deal with.

The mind-body dichotomy

As already mentioned, the mind-brain dualism has a long tradition in philosophical thinking, going back to Plato and Greek philosophers. Descartes gave his own solution to the problem, suggesting that the pineal gland is the actual point of the brain where the meeting of the spiritual mind with body is accomplished. In sharp contrast to dualism, there were the monist theories. They claimed that only mind or only body exists. Dualistic or monistic views in their original form are hard to develop today. However, one may discern parallel trends in our times. The dualistic approach claims that psychological phenomena are qualitatively different from physiological phenomena and they cannot be reduced to them. Consequently, psychological theory has no reason to rely on physiological data for the explanation of behavioral or experiential phenomena. There is nothing metaphysical in the psychological phenomena, of course, but the concepts developed in psychology suffice for the formulation of adequate explanatory theories. Physiological theories also have their own phenomena to explain, use their own concepts, and are not constrained by psychological thinking. Thus, there are two parallel roads to go, one for the study of mind and the other for the study of brain.

Monist views in psychology, on the other hand, is difficult to develop nowadays, because it is hard to deny the neuropsychological evidence showing the close relationship of psychological experience and behavior with brain damage. However, brain researchers may develop strong reductionist views, such that brain activity is the source of any psychological phenomenon. In this respect, understanding the functioning of brain will also explain the functioning of psychological phenomena. Moschovakis (this volume) makes a persuasive case of this stand. Still, psychological phenomena are so complex, that not even psychologists understand them, let alone brain researchers! Indeed, Neisser in his presentation (this volume) showed that even perceptual phenomena can hardly be reduced to neurological processes.

Evidently, there is a third road one can follow in treating the mind-brain issue, namely, the road of a common theoretical framework, which allows the description of both psychological and physiological phenomena in a comparable way. This road allows for the overcoming of the mind-body dichotomy and the interaction of the two independent lines of thinking. It is my conviction that this is the road current research will adopt, if it has not already adopted, as shown below. This road is represented by information processing theories and current cognitive theory which distinguishes levels of functioning of the intellect, namely cognition and metacognition.

Suppose mind is a «general information-

processing system, a complex of organizations and structures ascribed to an individual that processes information (including information from its own actions and experiences) and generates information to various subsystems» (Mandler, 1984, p. 49). The physiological substrate of this system is the brain. If we look at the mind and brain in this perspective, the perspective of an information-processing system, then it is clear that although we deal with two functionally different systems (the mind and the brain) we may study the correspondences of the two systems and develop concepts bridging the two systems. In fact, information processing theories have led to independent research and theories in psychology, neural sciences and computational research; they also foster the effort for bringing together concepts from all of these areas.

However, information processing theories do not sufficiently account for one aspect of knowledge which is specific to humans, namely metacognition. Metacognition refers to what we know about knowledge and cognition. It is awareness of the functioning of cognition and of the factors that influence it (Flavell, 1979). According to Nelson & Narens (1990, 1994) it presupposes two levels of functioning: the object-level (namely cognition) and the meta-level, which is a model of the object-level. One may discern further meta-levels each of them being a model of the hierarchically lower meta-level. Metacognition communicates with cognition in two ways: monitoring and control. Monitoring informs the meta-level about the object-level whereas control informs the object-level about the meta-level. The theoretical framework involving cognition and metacognition is particularly relevant to issues regarding consciousness, because metacognition presupposes awareness whereas cognition may function at an unconscious level. We shall come to this later on when we discuss the conscious vs. unconscious issue. Suffice it for the moment to say that the mind-brain issue has been restated in psychology in a way that does not imply the mind-body dichotomy of the past. What about the other two dichotomies stated above?

The conscious-unconscious dichotomy

The issue of conscious-unconscious processes was initially bypassed by the early information processing theorists, when they adopted the distinction «process-product». The processes of mind are basically unconscious and only their products come to awareness. In other words, we do not have to advocate two different types of processes (conscious-unconscious); there are only unconscious mental processes, whose products may reach awareness. In fact, consciousness and all that it denotes (ideas, thoughts, emotions, feelings, willing,...) is a construction, directly related to ordinary-language use. According to Mandler (1984) when one asks «what do you feel», one refers to feelings as something concrete, tangible and part of one's experience. Indeed, the question is phrased as if feelings were the basic characteristics of the mental system instead of one of its products. Actually, «the assertion of a feeling is a complex outcome of the mental system: Not only is the *experience* of a feeling a product, but its expression, through the language system, is the result of complex mental structures that intervene between its occurrence in consciousness and its expression in language» (p. 10).

Although such a stand is productive because it overcomes the dilemma conscious-unconscious, it is nevertheless simplistic. This is so because it views consciousness statically and it denies any possible dynamic interaction between processes and products in the long run. For instance, a fundamental question is: *do objects of awareness influence the course of thinking and action?* Expressly, do conscious thoughts, ideas, feelings or emotions (i.e., the products of unconscious processes) affect the processes that give rise to action? To take one more step: *Can conscious products influence the processes that give rise to them and thus change themselves?* I am refering here to what ordinary language calls «control of feelings». If consciousness is a mere product that cannot feed back on the information processing system, then what is

the use of it? Mere awareness of on-line processing and self-monitoring? I do not deny the value of such a monitoring function, but does this function explain all there is in consciousness?

The above questions bring me to a second issue: *Are there conscious processes that operate on the contents of awareness?* In fact, there is one word we use to express this function: *reflection.* Consciousness is both *awareness* and *reflection* on the contents of awareness. Reflection is process. It is fixing of thought on something; it is careful consideration of things. What does careful consideration mean? It means deliberate searching, analysing, integrating, comparing, inferring. Thus, reflection becomes the process by which new products of thinking (and awareness) are generated; these new products then can be further reflected upon (meta-reflection) and so forth. This is how, for example, epistemic knowledge, on which our whole culture rests, is built (Kitchener, 1983).

My question about conscious processes does not mean that these processes are necessarily different from the unconscious processes that produce conscious thoughts. However, the way lay people conceptualize conscious processes does not imply that the underlying mental processes are of the same nature either. For instance, we use the term *matching* for the comparison process at the unconscious level. Is matching exactly the same process as *comparing* or *analysing?* I will not go further in this direction. What I wanted to emphasize here is the long road we have yet to go in order to understand the nature of conscious and unconscious processes as well as the interplay between them. The study of metacognition can help us understand phenomena such as these outlined above, but there is more in consciousness that we need to explain. I am refering to individuality and subjectivity.

Subjectivity, individuality and the self. There is one more point I want to raise in relation to the process-product distinction. It seems to me that such a conceptualization of consciousness overlooks other fundamental aspects of it, such as *subjectivity* and *individuality.* The sense of the self as an individual is a unique feature of human conscious experience. The self is not just a name, an address and an occupation. It is awareness that what I (myself) experience is personal, not necessarily shared by others. Of course, there is the experience of the world, *the others* as distinct from *myself,* of the *objective world* vs. *subjective states.* Individuality and subjectivity are nothing but the sense one has that it is one's *own* ideas, one's *own* feelings, one's *own* thoughts, one's *own* decisions, one's *own* will. This *personal* character of consciousness was particularly emphasized by W. James (1890/1950) along with its stream-like nature. Still one could argue that these properties of consciousness are «products». Yes, they are. But how are they formed and for what reason?

I have argued elsewhere (Efklides, 1990) that consciousness is critical for action control. In the past psychologists used the terms *behavior* and *performance* to describe responses to stimuli or problem solving. No long-term goal directness nor personal appraisals were allowed into the explanatory models used. Since the 1980s the term 'action' made its way into the psychological vocabulary to illustrate the complexity of goal-directed behavior. Action is the outcome of cognitive processes, of personal appraisals and intentions, of planning and of socially shared values or models of activity. Action is characterized by both subjectivity and intersubjectivity, by communicative principles and historical constraints (Efklides, 1992). Therefore the issue is not just processes and products, but what are the factors that intervene and shape the functioning of the processes and the form of their products. Furthermore, how the products themselves become the means for the shaping of the processes that give rise to them.

The study of consciousness. It is exactly this complexity of conscious experience that prevented psychologists from considering it a legitimate object of study for more than 50 years, since the onset of behaviorism (Watson, 1913). Consciousness re-entered the psychological scene through the distinction of serial and parallel processing in the late 1960s (Neisser, 1967) and in the last 15 years it has become a central issue

in psychological theorising (for an overview see Efklides, 1990). In this endeavour psychologists are not alone. Philosophy, neuropsychology and neurosciences bring in their perspective and evidence. It is worth presenting some neuropsychological evidence, so that the future contribution of psychology to this issue can become clear.

No good explanation of the nature of conscious experience has been offered in brain research yet. Neurologists in the past dismissed the problem of consciousness by suggesting that it is nothing but an epiphenomenon or a by-product of brain activity (Brown, 1977). Recent research suggests that consciousness (or awareness) is the product of the interaction of complex brain structures or large sets of neurons. This idea has been further elaborated by current research. Crick & Koch (1992) in their review of the problem of visual awareness suggested that awareness is related not only to the firing of specific neurons, but also to the *rate* of firing of the neurons, which has to do with attention, and possibly with the *rythm* and *synchronisation* of firing of neurons, which serve to bind together activity in various cortical areas concerning the same object. Damasio (1994) in his recent book *Descartes, error* claims that there are *convergence zones* all over the brain, and particularly the prefrontal lobes, which are responsible for the coordination of information cited in various locations in the brain. All this activity is of course unconscious. How this activity is transformed into the kind of conscious experience we know is something not understood.

If psychology were to help understand the nature of consciousness and the possible underlying neural mechanisms it should try to show the nature of the various aspects of human experience. Exactly what do thoughts, feelings and emotions mean and what they refer to? And for thoughts and ideas, perhaps it is easy to define their denotational meaning. But for emotions and feelings it is not as easy. Take for instance the feeling of difficulty, which is a metacognitive experience, an experience we have when we solve a problem. What does feeling of difficulty mean to the person who experiences it? Lack of familiarity with the task? That cognitive processing is interrupted? Inability to decide which procedure is required for the execution of a task? Effort to assemble existing procedures or create new ones? Judging the complexity of the task and comparison with similar ones? Actually although feelings appear to be immediate and unique givens of subjective experience, they are products of unconscious inferential processes (Costermans, Lories, & Ansay, 1992; Efklides, Papadaki, Papantoniou, & Kiosseoglou, 1997; Efklides, Samara, & Petropoulou, 1997; Johnson, Saccuzo, & Larson, 1995; Whittlesea, 1993) that take into account a plethora of information, current and past. Therefore understanding the nature of human experience requires the identification of the processes that give rise to it and the factors that affect it. In fact feelings seem to form closely interrelated systems, each of them capturing a distinct aspect of cognitive processing but whose intensity and meaning is judged in relation to the others (Efklides, Samara, & Petropoulou, 1997). For example, feeling of difficulty is related to feling of familiarity, liking, confidence and satisfaction. This implies that conscious experience is a very complex phenomenon that results from the coordination of multiple pieces of information.

But even if we fully understood the psychological processes underlying the formation of subjective experience, we would still need to delimit the neural correlates of the processes involved in them. What is important is only the number of semantic networks activated in a particular occasion, or is it the strength of activation, the inhibitory forces acting at the same time, or the accessiblity of information? How are inferential processes represented at the neurological level? Answers to questions of this form may give us some clues as to what to look for at the brain level.

There is already research that links brain processes with metacognitive experiences. One example comes from the work on feeling of knowing (FOK), which is related to the tip-of-the-

tongue phenomenon (Hart, 1965; Koriat, 1994). The study of FOK has been used for the testing of trace-access memory models and it helps us understand how brain accesses or infers information. However, it helps us test hypotheses about the way brain builds its own models of itself, namely if there is a «memory-monitoring module» that can directly inspect the stored memory traces and determine whether the target's trace is there or not (Koriat, 1994). Actually, a model that has been suggested by Koriat (1994), the accessibility model, denies the necessity of involving such a mechanism of priviledged access and inspection of information. Research has shown that FOK judgements merely monitor the accessibility of partial information regarding the target in question, and there is no need for invoking a memory-monitoring module. Therefore, research on subjective experience may illuminate what is the brain mechanism for metacognition, and thus explain how the various levels of *meta* (successive models of cognitive functioning) may affect both cognition and performance.

I assume the baseline in such research would be automatized processing where we have cognition without metacognition. Further evidence on the relations of metacognition with cognition may come from metacognitive dysfunction. In the case of metacognitive dysfunction we have *cognition without awareness*, such as vision without awareness (i.e., blindsight or visual agnosia) or memory without awareness (memory without metamemory) (Shimamura, 1995).

In the case of *blindsight*, which has been selected by Crick and Koch (1992) as one critical paradigm for the study of consciousness, the patient exhibits some visual capacity within a scotoma or hemianopia field, despite the absence of any conscious experience of visual perception (Weiskrantz, 1986). For example, patients with blindsight can detect the presence of a stimulus in the blind region, though they acknowledge no visual perception in that region and often claim that their responses were based on mere guesses.

In the case of *visual agnosia*, the patient has no impairment of visual sensation but cannot recognize visually presented objects. If the same object is placed in the person's hand, he/she can identify it correctly. Furthermore, in a particular case of visual agnosia, namely the *associate visual agnosia* or *object agnosia*, the patients are able to draw objects from memory or copy drawings of objects, but they cannot recognize what they have drawn! In this case we have metacognitive failure in *knowing*, which is possibly due to a dysfunction in a process that integrates visual sensations into the perception of recognizable objects. In other words, there is a failure to associate visual information with semantic or verbal knowledge or failure to integrate percepts into a recognizable form.

Implicit memory in *organic amnesia* is another example of cognition without metacognition. Patients with organic amnesia (due to damage to the medial temporal region) fail to remember facts and events encountered after brain surgery whereas they do often recall quite well things they had learnt before the onset of amnesia. However, these patients do exhibit an ability to learn new skills, that is they retain implicit memory. What they lose is *conscious* memory of facts, not unconscious, automatized procedural knowledge.

Finally, patients with *korsakoff's syndrome* often exhibit poor metamemory, in the form of feelings of knowing or knowledge of mnemonic strategies. This deficit is not present in other amnesic patients, such as patients with medial temporal lobe lesions. Such a deficit indicates a failure to be aware of what one knows or not knows, and it may be related to frontal lobe damage. Still these patients have no problem in the confidence they report about their response, which implies that confidence uses different neural mechanisms (see Nelson, 1996).

What does all the above evidence suggest? First, cognition and metacognition are two distinct functions. Second, metacognition is probably related to the integration of information from various sources and to the monitoring of the processing of information so that appropriate judgements or decisions can be made. Third, the various levels of metacognition may integrate different sorts of

information and may involve successively larger chunks of information. Fourth, both psychological and neuropsychological work is needed in order to fully understand the mind and brain.

Let me add at this point that the activity in various cortical areas concerning the same object may represent information about conceptual and naming (linguistic) aspects of the object but also, and I want to emphasize this point, *affective* features. It is well known that words, for instance, have both a denotation and a connotation, that is subjective meaning which is affectively charged. Therefore, both psychological and brain research need to show how the mind and the brain process information which is not purely denotative. I am emphasizing this point in order to come to the third dichotomy I mentioned at the beginning of this paper, namely, whether mind refers only to cognition (intellect) or it also involves affect and volition.

The mind as intellect vs. cognition, affect and volition dichotomy

If mind is conceived as a purely information-processing system, analogous to a computer, then this mechanistic conception may lead us to view mind as an intellectual apparatus which processes emotionally neutral information. Admittedly, such a fallacy is not particular to our times. The tradition which views mind as spiritual, cold-blooded, emotionless (or passion-free) ratio vs. the body, which is controlled by the worldly needs and temptations goes back to ancient times and to metaphysical ideas. In modern psychology, metaphysics have no place, of course, but the study of cognition and intelligence has been almost totally independent from the study of emotions and affective processes. The study of volition has also been absent from psychological thought since the pioneer work of Ach (1910) and Michotte & Pruem (1910) at the beginning of the century. Only recently, in the 1980s, has volition come back to the psychological dictionary via action theories (Efklides, 1995; Kuhl, 1985). What kind of evidence then is needed in psychology so that more comprehensive theories of human mind can be created?

Evidently, there are two possible roads to go: the first is the methodologically sound road, the one that step by step enriches the predominantly cognitive or affective paradigms with variables representing concepts of the neglected domain. Thus, by testing specific hypotheses each time, the experimenters will gradually fill in the missing links in the information-processing chain.

The second road is more risky and basically exploratory. It brings together many different concepts from the cognitive and affective domain, presumably relevant to an action or achievement situation that resembles the complexity of human performance in real life, and explores their interrelations. Such a paradigm may lack explanatory rigor but it may provide insight into the interplay of the various aspects of the mind *in vivo*. For me, a crucial component in such a paradigm would be subjective experience, namely what the person feels as he/she carries out a task. Subjective experience may take many other forms and in situations other than task or achievement situations. I am focusing on task-related subjective experience because this is easier to relate to cognition and metacognition.

Subjective experience. Subjective experience are the on-line, task or situation-related feelings, ideas and thoughts. I am again focusing on feelings, because I believe they are very little studied whereas they have a lot to offer to our understanding of the functioning of the mind. Up to now, very little attention has been paid to this aspect of conscious experience, except perhaps the feeling of knowing. However, there are a lot of other feelings which reflect estimations of processing parameters such as familiarity, recency, time requirements, availability of resources, probability of success, difficulty, satisfaction with the solution provided, ideas about one's competence,... How are these feelings and ideas being formed, how accurate are they, how are they related to cognitive and emotional characteristics of the person, how are they related to actual performance, and how do they influence future occupation with the same or similar tasks?

If we introduce subjective experience variables into our designs, we open the way for

understanding the nature of consciousness and the dynamic interplay of conscious experience with relatively stable person characteristics such as intelligence and personality. In a number of studies performed in the Laboratory of Psychology in Aristotle University of Thessaloniki (Efklides, Papadaki, Papantoniou, & Kioseoglou, 1997, in press; Metallidou & Efklides, 1995) we used cognitive ability variables, affective variables such as anxiety-trait and need achievement, performance on laboratory or school tasks, and metacognitive estimations either in the form of feelings in the first study (i.e., feeling of difficulty) or ideas about one's cognitive self (namely, preferred mode of task-processing and ability to handle particular types of tasks). As shown in Figure 1, feelings of difficulty were aggregates of effects from affective (anxiety), cognitive ability and performance factors. In Figure 2 is shown that the image of cognitive self was also the aggregate of both cognitive and affective factors effects. These results imply that, although we may identify the cognitive and affective domains as two separate systems functioning according to their own laws, there is one third domain, the domain of subjective experience, or the world of the self, which draws on the other two systems, although it functions according to different laws and expresses the personal transformation of information and personal sense of things.

Metacognition as a manifestation of Integrated processing. In our work we studied only a limited aspect of subjective experience, the aspect related to *metacognitive experiences.* When I referred to metacognition in the previous chapters one could get the impression that metacognition is only related to cognition. However metacognitive experiences, such as feelings, reflect personal appraisals of one's own cognitive processing and are affected by both cognitive and emotional factors. Therefore metacognition may provide the basis for the understanding of subjective experience and via it of consciousness and even brain-functioning.

To illustrate my point. Damasio (1994) has described a number of patients with damage to frontal lobes, who can identify and describe horrible pictures and issues related to themselves with great detail but with no emotional response to these details. According to the definition of metacognition, these patients are «metacognitive machines», because they are aware of the cognitive aspect of the information processed but they are not aware of any emotional aspect of it. Normal people, however, when they are aware of something, they are aware of both its cognitive content and its emotional import. This integrated form of awareness is critical for decision-making, as Damasio claims. How exactly this integrated form of awareness is constructed is a research question.

Yet even if we knew how metacognition functions and how subjective experience is formed, we might not know how volition fubnctions, and more generally how volition interacts with cognition and emotion.

Volition. In order to complicate things further I would like to add to the picture of conscious or subjective experience the element of volition, that is the third constituent of the mind, the other two being cognition and affect as stated above. Some critical aspects of conscious experience is the formation of goals and intentions, the determination one feels to achieve something, the decision to pursue one line of acting rather than another, the protection of the selected course of action in face of other competing ones, the suspension of action until the circumstances allow its implementation, and the monitoring of action until it reaches the goal set (Efklides, 1995). All these aspects of conscious experience are related to volition.

One way to study volition is through action. Action theories (see Heckhausen, 1991) show that volition has to do with the changing of the strength of activation, and this may be automatic or self-guided, when one consciously avoids particular stimuli and seeks others. However, the stages before the initiation of action involve all the situation-related cognition, metacognition and affect. Once the decision is reached, a new stage occurs, the execution stage. During this stage the pre-planned course of action takes place with the control of bodily movements. Monitoring and regulation of action is also present. After

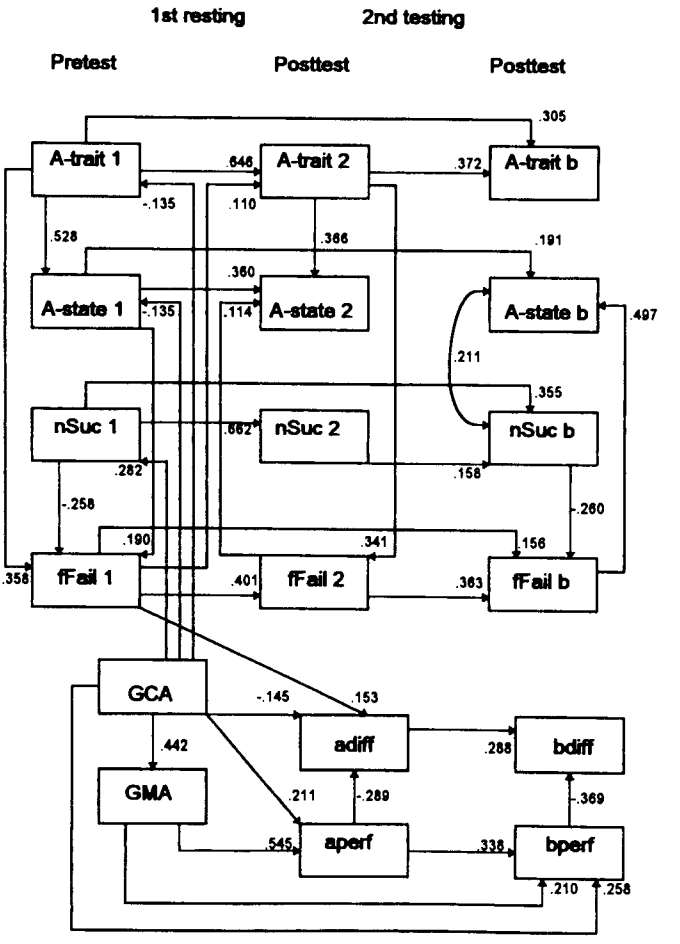

NOTE: The meaning of the symbols is:

1:	pretest on the first testing wave	A-trait:	anxiety-trait
2:	posttest on the first testing wave	A-state:	anxiety-state
b:	second testing wave	nSuc:	need success
GCA:	general cognitive ability	fFail:	fear of failure
GMA:	general mathematical ability		
aperf:	performance on the school-mathematic-tasks for the first testing wave		
bperf:	performance on the school-mathematic-tasks for the second testing wave		
adiff:	feelings of difficulty on the school-mathematic-tasks for the first testing wave		
bdiff:	feelings of difficulty on the school-mathematic-tasks for the second testing wave		

Figure 1
The interrelations between cognitive ability (general and domain-specific), affect, performance, and feelings of difficulty

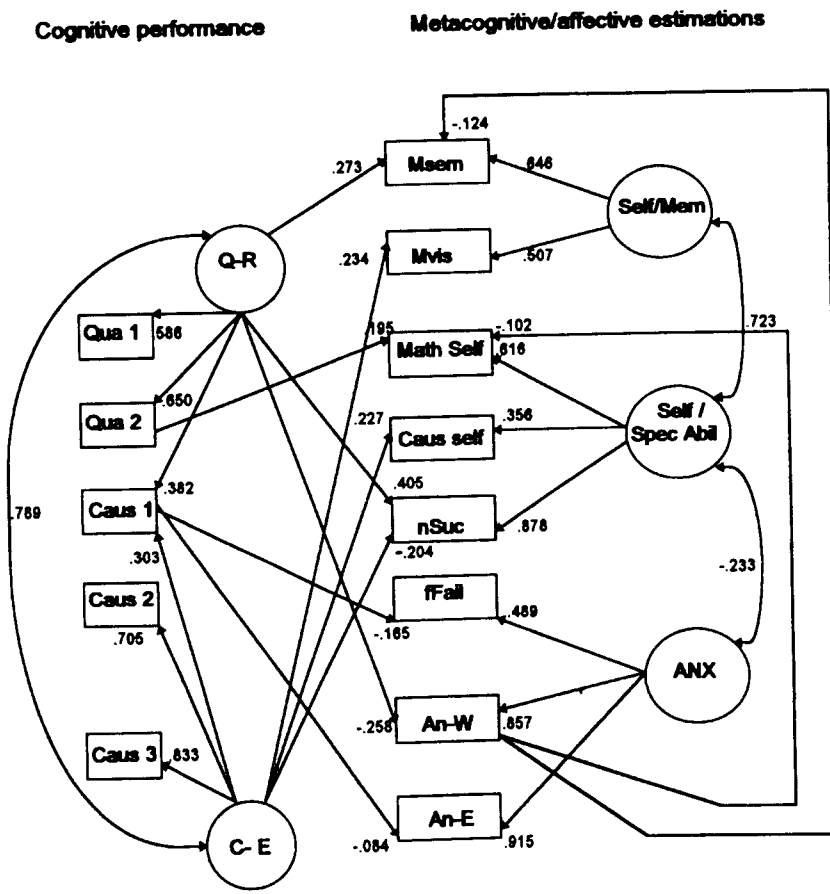

NOTE: The meaning of the symbols is:

Q-R:	Quantitative-Relational ability	Self/Mem:	Image of self as regards memory
C-E:	Causal-Experimental ability	Self/Spec Abil:	Image of Self in domain-specific abilities
Qua 1:	Easy math problem	ANX:	Anxiety
Qua 2:	Difficult math problem	nSuc:	Need success
Caus 1:	Easy causal problem	fFail:	Fear of failure
Caus 2:	Medium difficulty causal problem	An-W:	Anxiety Worry
Caus 3:	Difficult causal problem	An-E:	Anxiety Emotionality
Msem:	Semantic Memory	Math Self:	Image of Self in Math tasks
Mvis:	Visual Memory	Caus Self:	Image of Self in Causal tasks

Figure 2

The interrelations between cognitive ability, affect, and image of cognitive self

completion of action, evaluation of action results takes place. At this stage feelings and emotions related to action outcomes are experienced as well as causal attributions about the causes of the action outcomes. In this way, the post-action phase provides information regarding the self and the others and motivates further action. The above outline of the process of action shows that volition is closely interrelated to motivational, emotional, cognitive, and metacognitive processes and it is one of the most complex manifestations of human mind.

Yet, the defining characteristic of volition is the implementation of the decisions reached and the mobilization of the body for the execution of the appropriate actions. How is this being done? Damasio offers some speculations about the possible mechanism underlying volition. He claims that it could be the effect of *somatic markers* (which control body functions), modulated by prefrontal and limbic structures, such as the convergence zones. Convergence zones are the repository of *dispositional* representations for the appropriately categorized and unique contigencies of our life experiences. Some of decision making in us is not very well worked out, but accomplished by covert mechanisms, directly responding to somatic markers. These are the relatively unthinking, automatic or instictive decisions. However, higher-order decision making requires the dispositional representations that characterize the self. It also requires reflection and metareflection on the available data and modification of the networks and intensity of the connections in the convergence zones. How this is accomplished is one of the many mysteries future research has to explain.

Conclusions

In my presentation I tried to show the complexity of the issues psychology and neurosciences have set out to explain in their pursue of the mind-body relations. It is obvious that psychological research and theory has overcome a lot of different taboos and re-introduced the issue of conscious experience as a legitimate and feasible goal of study. By introducing such complex phenomena into the study of mind, psychology sets the scene for future brain research, too. This does not mean that psychology will dictate brain research its course nor that psychology will refrain from developing theories until there is conclusive psychological and neurological evidence about the functioning of the brain. It means that mind and brain research will have to explain in their own terms the two facets of the same coin and use the available knowledge in both sciences for creating and testing hypotheses about the interplay of brain and mind. The 21st century is coming with a lot of expectations for a better understanding of the mysteries of brain and mind.

References

Ach, N. (1910). *Ueber den Willensakt und das Temperament.* Leipsig: Quelle & Meyer.

Brown, J. (1977). *Mind, brain and consciousness: The neuropsychology of cognition.* New York: Academic Press.

Costermans, J., Lories, G., & Ansay, C. (1992). Confidence level and feeling of knowing in question answering: The weight of inferential processes. *Journal of Experimental Psychology: Learning, Memory, & Cognition, 18,* 142-150.

Crick, F., & Koch, C. (1992). The problem of consciousness. *Scientific American, 267 (Special issue),* 111- 117.

Damasio, A. R. (1994). *Descartes' error: Emotion, reason and the human brain.* London: Picador.

Ευκλείδη, Α. (Efklides, A.) (1990). Η συνείδηση υπό το πρίσμα των σύγχρονων ψυχολογικών δεδομένων (Consciousness: Current psychological data). *Νέα Παιδεία, 52,* 40-49, *53,* 32-46.

Ευκλείδη, Α. (Efklides, A.) (1992). *Γνωστική Ψυχολογία* (Cognitive Psychology). Θεσσαλονίκη: Art of Text.

Ευκλείδη, Α. (Efklides, A.) (1995). *Ψυχολογία κι-*

νήτρων (Psychology of Motivation). Αθήνα: Ελληνικά Γράμματα.

Efklides, A., Papadaki, M., Papantoniou, G., & Kiosseoglou, G. (1997). The effects of cognitive ability and affect on school mathematics performance and feelings of difficulty. *American Journal of Psychology, 110,* 225-258.

Efklides, A., Papadaki, M., Papantoniou, G., & Kiosseoglou, G. (in press). Individual differences in feelings of difficulty: The case of school mathematics. *European Journal of Psychology of Education.*

Efklides, A., Samara, A., Petropoulou, M. (1997, August). Metacognitive experiences before, during, and after problem solving. In A. Efklides (Chair), *Metacognitive experiences and their role in cognition.* Symposium conducted at the 7th Conference of the European Association for Research on Learning and Instruction, Athens, Greece.

Flavell, J. H. (1979). Metacognition and cognitive monitoring: A new area of cognitive developmental inquiry. *American Psychologist, 34,* 906-911.

Hart, J. T. (1965). Memory and the feeling-of-knowing experience. *Journal of Educational Psychology, 56,* 208-216.

Heckhausen, H. (1991). *Motivation and action.* Berlin: Verlag

Johnson, N. E., Saccuzo, D. P., & Larson, G. E. (1995). Self-reported effort versus actual performance in information processing paradigms. *Journal of General Psychology, 122,* 195-210.

Kitchener, K. S. (1983). Cognition, metacognition, and epistemic cognition: A three- level model of cognitive processing. *Human Development, 26,* 222-232.

Koriat, A. (1994). Memory's knowledge of its own knowledge: The accessibility account of the feeling of knowing. In J. Metcalfe & A. P. Shimamura (Eds.), *Metacognition: Knowing about knowing* (pp. 115-135). Cambridge, MA: MIT Press.

Kuhl, J. (1985). Volitional mediators of cognition-behavior consistency: Self regulatory processes and action versus state orientation. In J. Kuhl & J. Beckmann (Eds.), *Action control: From cognition to behavior* (pp. 101-128). New York: Springer-Verlag.

Mandler, G. (1984). *Mind and body.* New York: Norton.

Metallidou, P., & Efklides, A. (1995, August). *Cognition, metacognition and affect: Their interaction along with development.* Paper presented at the 6th EARLI Conference, Nijmegen, The Netherlands.

Michotte, A. E., & Pruem, E. (1910). Etude experimentale sur le choix volontaire et ses antecedents immediats. *Archives de Psychologie, 10,* 119-299.

Neisser, U. (1967). *Cognitive Psychology.* New York: Appleton-Century-Crofts.

Nelson, T. O. (1996). Consciousness and metacognition. *American Psychologist, 51,* 102-116.

Nelson, T. O., & Narens, L. (1990). Metamemory: A theoretical framework and new findings. In G. Bower (Ed.), *The psychology of learning and motivation* (Vol. 26). New York: Academic Press.

Nelson, T. O., & Narens, L. (1994). Why investigate metacognition? In J. Metcalfe & A. P. Shimamura (Eds.), *Metacognition: Knowing about knowing* (pp. 1-25). Cambridge, MA: The MIT Press.

Shimamura, A. P. (1994). The neuropsychology of metacognition. In J. Metcalfe & A. P. Shimamura (Eds.), *Metacognition: Knowing about knowing* (pp. 253- 276). Cambridge, MA: MIT Press.

Stein, J., & Urdang, L. (Eds.) (1967). *Random House dictionary of the english language.* New York: Random House.

Watson, J. B. (1913). Psychology as the behaviorist views it. *Psychological Review, 20,* 158-177.

Weiskrantz, L. (1986). *Blindsight: A case study and implications.* Oxford, UK: Oxford University Press.

Whittlesea, B. W. A. (1993). Illusions of familiarity. *Journal of Experimental Psychology: Learning, Memory, and Cognition, 19,* 1235-1253.